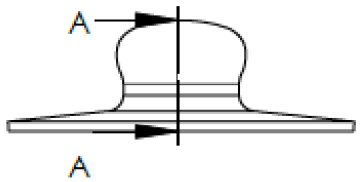

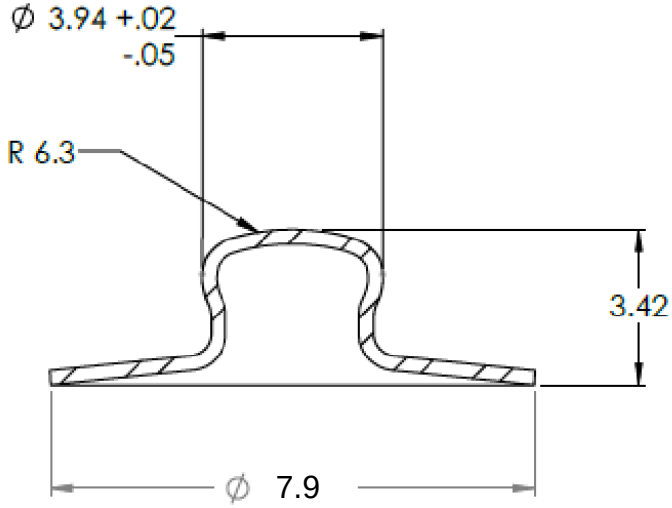

SECTION A-A
SCALE 7 : 1

SCALE 3 : 1

NOTES:

MATERIAL : STAINLESS STEEL

ALL DIAMETERS MUST BE CONCENTRIC TO WITHIN .076mm TIR

DIMENSIONS ARE IN MILLIMETERS

		UNLESS OTHERWISE SPECIFIED:		NAME	DATE
		DIMENSIONS ARE IN INCHES TOLERANCES: FRACTIONAL ± ANGULAR: MACH ± BEND ± TWO PLACE DECIMAL ± THREE PLACE DECIMAL ±	DRAWN	crl	6.21.19
			CHECKED		
			ENG APPR.		
			MFG APPR.		
		INTERPRET GEOMETRIC TOLERANCING PER:	Q.A.		
		MATERIAL	COMMENTS:		
NEXT ASSY	USED ON	FINISH			
APPLICATION		DO NOT SCALE DRAWING			

ROMED

TITLE:

14 SF-8 STUD-SS

SIZE	DWG. NO.	REV
A	STUD	
SCALE: 5:1		SHEET 1 OF 1

PROPRIETARY AND CONFIDENTIAL

THE INFORMATION CONTAINED IN THIS DRAWING IS THE SOLE PROPERTY OF <INSERT COMPANY NAME HERE>. ANY REPRODUCTION IN PART OR AS A WHOLE WITHOUT THE WRITTEN PERMISSION OF <INSERT COMPANY NAME HERE> IS PROHIBITED.

5 4 3 2 1